2010 FLYING ACES CLUB
CONTEST DIRECTOR'S
SCORING WORKSHEET PACKET

The scoring worksheets in this packet have been reviewed and approved by the CinC and are designed to simplify the scoring of FAC events.

The worksheets are NOT intended to supplant or amplify the Flying Aces Club Rule Book. Contest Directors will need to refer to the Rule Book for all guidance related the scoring process, eligibility, procedures or or anything else which isn't obvious on these score sheets. These sheets are simply for the recording of information concerning bonus points, scale points and flight times and to simplify any mathematics involved in arriving at total scores for multiple contestants.

Although there are only a total of 12 score sheet forms, you'll find that every event in the 2010 rule book except the BLUR race is covered by one of the forms. Many of the score sheets are useful for several different events.

These score sheets are designed for printing and placing in a 3 ring binder if desired. So there will be no concern about wind, rain, spilled coffee etc., ruining the score sheets it is recommended that they be laminated and written on with "sharpie" type pens Errors are erased with rubbing alcohol and a que tip, and the sheets can be reused indefinitely. Scotch taping a tab on each event sheet allows rapid location while recording scores.

Included is an FAC Scale Judging worksheet which can be reproduced and aid in judging individual models. You'll also find a Rubber Scale Bonus Point Computation Guide and an FAC Power Scale Bonus Point Computation Guide which can reduce the need to constantly thumb through the Rule Book.

Comments and recommendations for improving these score sheets, while working within the confines of an 8.5"X11" sheet are welcomed.

George H. White
Pensacola Free Flight Team
Gulf Coast Aeroplane Works, FAC Squadron # 46
5928 Hermitage Drive
Pensacola, FL 32504
White76@cox.net

2010 FAC SCALE JUDGING WORKSHEET

(NOT APPLICABLE TO GHQ PEANUT OR JET CATAPULT SCALE — SEE SCORE SHEETS FOR THOSE EVENTS)

CONTESTANT # _____ FULL NAME _____

EVENT _____ MODEL _____

(1) **CONSTRUCTION & DETAILS:**

A maximum of 30 points will be given for general accuracy and the extent of detail such as struts, rigging, engine cowl, exhausts, armament, etc. No cockpit or cabin interiors will be considered, except for the windscreen and instrument panel, unless a full panel is impossible due to a high thrust line.

NOT MUCH	SOME OF IT	MOST OF IT	ALL THERE
0 TO 10	11 TO 20	21 TO 29	30

(2) **COLORING AND MARKINGS:**

A maximum of 20 points will be given for accuracy and extend of coloring and markings. Judging will consider such items as insignia, numbering, large, wide stripes, major panel lines, etc. for a particular subject modeled. Where a model is built of a proposed design, the full scale prototype never having been built, then its color and markings should reflect its designed purpose and era of its creation. Silver colored tissue may be used to represent polished aluminum. There will not be any difference in scoring between the proper colored tissue and painted surfaces.

(3) **WORKMANSHIP:**

A maximum of 12.5 points will be given for workmanship, such as good covering, alignment, neatness, etc. Wear and tear should not be a negative factor in determining workmanship points. Models do not have to be in pristine condition to to get maximum workmanship points.

SCALE POINTS FOR THIS CONTESTANT:

(1) _____ POINTS FOR CONSTRUCTION AND DETAILS plus

(2) _____ POINTS FOR COLORING AND MARKINGS plus

(3) _____ POINTS FOR WORKMANSHIP =

_____ **TOTAL SCALE SCORE**

2010 BONUS POINT COMPUTATION GUIDE FOR FAC RUBBER SCALE

Bonus Points
Awarded

BASIC MODEL CONFIGURATION (These are **added** to points relating to power)

0 High wing cabin monoplane
3 Parasol wing
5 Shoulder or mid-wing
5 Canard or tandem wing
10 Low wing
15 Biplane or sesquiplane
20 More than two wings
10 Seaplane with multiple floats of proportional scale dimensions
10 Flying boat or amphibian
15 Unorthodox design (whatever is not listed above....flying wings, autogyro, etc.)
3 Skis of scale width and length
2 Each non-powered scale size/diameter prop
5 Each **rubber** powered conta-prop **unit** in scale location that freewheels
7 Each **rubber** powered contra-prop **unit** in scale location that does not freewheel
NOTE re Contra Props: Each prop must turn in the opposite direction at the same speed when the prop shaft is turned
1 Each housing for a non-powered jet engine or multiple jet engines attached to a wing or the fuselage via an appendage.

ADDITIONAL POINTS FOR RUBBER MODELS BASED ON NUMBER AND LOCATION OF POWERED PROPS

SINGLE PROP
5 If the prop is a "pusher" in the scale location

TWO PROPS
10 For center-line tandem props if both props are powered in such a manner as to contribute generously to the thrust and duration of motor run needed for flight
25 For off-center twins
+5 If one or both props is a "pusher" in a scale location (excluding tandem aircraft)

THREE PROPS
20 "Tri-motor models provided te off-center props contribute significant power
+5 If ANY prop is a "pusher" in a scale location

ADDITIONAL PAIR OF PROPS
10 Each additional pair provided all props are equally powered
+5 If ANY prop is a "pusher" in a scale location

DUCTED FAN MODELS
15 Ducted fan propulstion model
+7 Each additional ducted fan unit

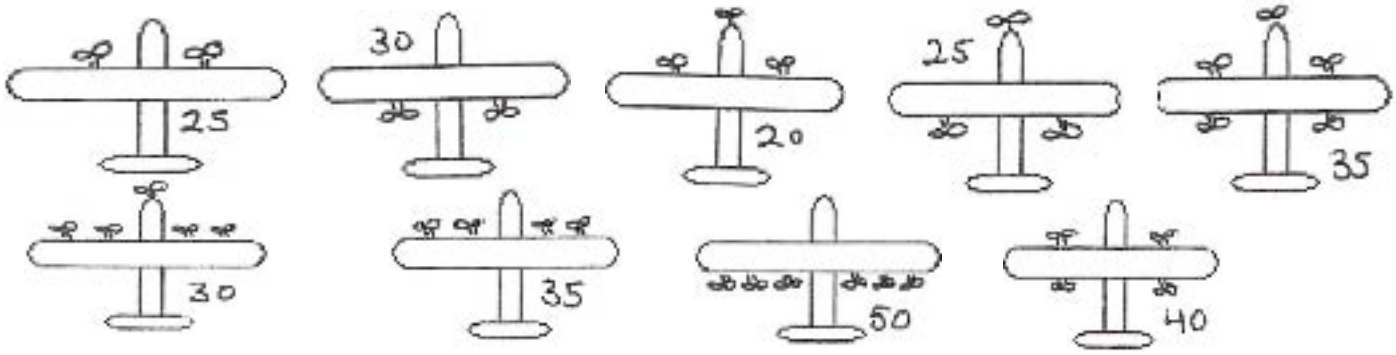

2010 BONUS POINT COMPUTATIONGUIDE FOR FAC POWER SCALE

Bonus Points
Awarded

BASIC MODEL CONFIGURATION (These are **added** to points relating to power)

0	High wing cabin monoplane
3	Parasol wing
5	Shoulder or mid-wing
5	Canard or tandem wing
10	Low wing
15	Biplane or sesquiplane
20	More than two wings
10	Seaplane with multiple floats of proportional scale dimensions
10	Flying boat or amphibian
15	Unorthodox design (whatever is not listed above....flying wings, autogyro, etc.)
3	Skis of scale width and length
2	Each non-powered scale size/diameter prop
1	Each housing for a non-powered jet engine or multiple jet engines attached to a wing or the fuselage via an appendage.

ADDITIONAL BONUS POINTS BASED ON NON-ELECTRIC DRIVEN PROPS

15	For first driven tractor prop
20	For first driven pusher prop
25	For each additional driven prop, regardless of how driven or where located

ADDITIONAL BONUS POINTS BASED ON ELECTRIC DRIVEN PROPS

0	For first driven tractor prop
5	For first driven pusher prop
5	For each additional driven prop regardless of how driven or where located

ELECTRIC DRIVEN CONTRA-ROTATING PROPS

Contra-rotating prop pairs count as prop #1 and prop #2. For example:

One tractor contra-prop unit on the nose would equal 5 points — 0 points for prop #1 plus 5 points for prop #2.

One pusher contra-prop unit on the tail would equal 10 points — 5 points for the first pusher and 5 points for the additional prop

See examples below:

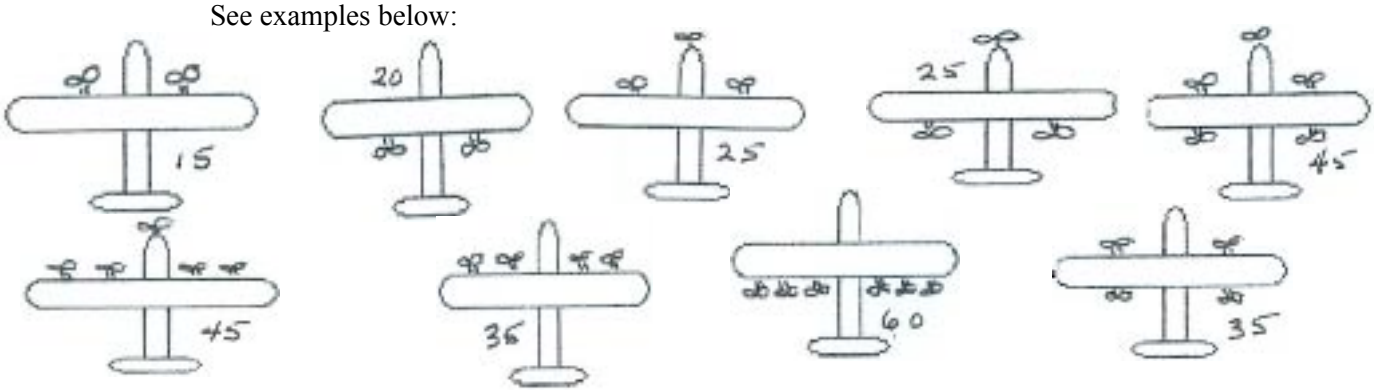

ADDITIONAL BONUS POINTS FOR NON-RUBBER POWERED DUCTED FAN MODELS

10	Single ducted fan model
5	Each additional ducted fan unit

2010 EVENT TO SCORE SHEET CROSS REFERENCE

SCORE SHEET FORM #	EVENT
1	Peanut Scale
1	Rubber Scale
1	Jumbo Scale
1	Giant Scale
1	Rubber Powered Jet Scale
2	Rocket/Jet Scale
3	Pioneer Scale
2	Power Scale
6	FAC-GHQ Peanut Scale
4	Golden Age Civil Scale
4	Golden Age Military
4	Modern Age Civil Scale
4	Modern Age Military
4	Low-Wing Military Trainer Scale
5	Thompson Race
5	Greve Race
12	Shell Speed Dash
5	Aerol Race
5	Bendix Race
5	Goodyear/Formula Race
5	WWI Combat
5	WWII Combat
9	Jet Catapult Scale
7	FAC Dime Scale
8	Pseudo Dime Scale
7	Old Time Plan/Kit Scale
11	No-Cal Profile Scale
12	Phantom Flash
10	Embryo Endurance
12	Old Time Stick
12	Old Time Rubber Cabin
12	2 -Bit Plus One OTR
12	Jimmy Allen
12	Old Time Gas Replica

2010 FAC PEANUT, RUBBER SCALE, JUMBO & GIANT SCALE, RUBBER JET SCALE SCORING WORKSHEET

NOT TO BE USED FOR FAC POWER SCALE OR PIONEER SCALE

#	NAME	MODEL	Construction & Details 0 — 30 @	Color & Markings 0 — 20 @	Work-manship 0 — 12.5 @	Total Scale Points **A**	Bonus Points * **B**	Flight # 1	Flight # 2	Flight # 3	Flt Pts *f* ** **C**	**A** + **B**+ **C**	Place

@See 2010 FAC Scale Judging Worksheet

* See Rubber Scale Bonus Point Calculation Sheet

Tie Breaking: A single fly-off will be flown. Bonus and Scale Points will be added to-**factored** fly-off flight points to determine winner. If tie remains, give multiple awards

** Flight Points = Highest time of three flights, OR (at CD Discretion) total of all flights (1,2 or 3) ÷ 3. Final time is to be factored as per the FAC Scale Flight Points Table in the back of the FAC Rule Book. Times are rounded down to last full second

Form # 1

EVENT NAME _____

Event # _____

2010 FAC POWER SCALE (Any Power Other Than Rubber) & ROCKET/JET SCALE SCORING WORKSHEET

#	NAME	MODEL	Construc-tion& Details 0 — 30 @	Color & Markings 0 — 20 @	Work-manship 0 - 12.5 @	Total Scale Points **A**	Flight # 1	Flight # 2	Flight # 3	Flight Score **B** *	Bonus Pts **C** **	Total **A+ B+ C**	Place ***

@See 2010 FAC Scale Judging Worksheet

* Flight Score = Either Best Single Flight or (at CD discretion)Total of All Flights (1,2 or 3) ÷ 3. Times are rounded down to whole seconds, NOT Factored. Max=120

** See Power Scale Bonus Point Calculation Sheet

Tie Breaking: Highest scale points (exclusive of bonus points) wins. If both are the same, highest flight points wins. If still tied, multiple awards are given

Form # 2 **EVENT NAME:** _____ Event # _____

2010 FAC PIONEER SCALE SCORING WORKSHEET

#	NAME	MODEL	Construction & Details 0 — 30 @	Color & Markings 0 — 20 @	Workmanship 0 - 12.5 @	Total Scale Points **A**	Flight # 1	Flight # 2	Flight # 3	Best Flight *	Bonus Pts **	Best Time *f*+ Bonus *** **B**	**A** + **B**	Place

@See2010FAC Scale Jundging Worksheet

* Either the best flight of three or (optional per CD) the total of all flights ÷3

** See Bonus Point Calculation Sheet

***** Best Flight Time (Factored) Plus Bonus Points (B) may not exceed 82.5 Points**

Tie Breaking: Highest Scale Points (exclusive of bonus points)wins. If equal, highest flight points wins. If both are equal, multiple awards are given.

Form # 3

PIONEER SCALE

Event # _____

2010 FAC GOLDEN AGE CIVIL, GOLDEN AGE MILITARY COMBAT, MODERN CIVIL AND MODERN MILITARY COMBAT & LOW WING MILITARY TRAINER SCALE SCORING WORKSHEET

#	NAME	Model	Construction & Details 0 — 30 *	Color & Markngs 0 — 20 *	Workmanship 0 — 12.5 *	Total Scale Score	Flight # 1	Flight # 2	Flight # 3	Total Flight Time	Place

*CD is to "Eyeball" for these qualities on the field. See 2010 Scale Judging Worksheet. Failure to achieve a total score of at least 45 is disqualifying. See also page 5 of the Rule Book. Proof of scale must be presented upon request.

Tie Breaking: See page 16 of rule book and decide which of the four methods of fly-off to select. Fly-off method should be published in advance.

Form # 4

EVENT NAME _____

EVENT # _____

2010 FAC MASS LAUNCH SCORING WORKSHEET

#	NAME	Model	Construction & Details 0 — 30 *	Color & Markngs 0 — 20 *	Workmanship 0 — 12.5 *	MARK SEQUENCE OR TIME EACH MODEL IS DOWN						PLACE
						Round 1	Round 2	Round 3	Round 4	Round 5	Round 6	

*CD is to "Eyeball" for these qualities on the field. Failure to achieve a total score of at least 45 Scale points is disqualifying. Models must be in proper color with appropriate armament, marking, numbers, insignia, nose art, struts & wires, 3D exhaust stacks etc. Radial Engine Aircraft must at least have paper engine seen from front + cowl bumps where applicable. Military aircraft must have armament and must have been either produced and intended for combat or experienced combat in the wars for which the mass launch replicates. Refer also to page 5 of the Rule Book. Proof of scale must be presented upon request.

Form # 5

EVENT NAME: _____

Event # _____

2010 GHQ PEANUT SCALE SCORING WORKSHEET
(NOT FOR USE WITH FAC PEANUT SCALE

#	NAME	MODEL	COLOR 1 — 3	MARKINGS 1 — 3	DETAILS Minus3 TO 6	TOTAL SCALE POINTS **A**	X	FLIGHT MULTI-PLIER **B** * See Below	=	SCALE SCORE **A** X **B**	FLT #1	FLT #2	FLT #3	FINAL SCORE **	Place

* **Flight multiplier** is the first two digits of the highest total number of seconds flown in all three flights by **any contestant** in the GHQ Peanut competition that day. If the best 3 flight total is fewer than 3 digits, use only the first digit of the best 3 flight total.

** **Final Score** = SCALE SCORE+FLT#1+FLT#2+FLT#3

Tie Breaking: Single flyoff time X 3 + scale score. If tie remains, give multiple awards

Form # 6

GHQ PEANUT SCALE

EVENT # _____

2010 FAC DIME SCALE & FAC OLD TIME PLAN/KIT SCALE SCORING WORKSHEET
NOT FOR USE WITH PSEUDO DIME SCALE

#	NAME	MODEL	Flt#1	Flt#2	Flt#3	3 Flt Total **A**	Bonus Points **B** *	**A+ B**	Place
ENTER FLYOFF SCORES BELOW.									

Do compliance check of model to plans and record bonus points **prior** to entering first flight score.

For Dime Scale: Review Pages 25 through 27 of Rule Book for compliance rules

For Old Time Kit Scale, Review pages 30-31 of Rule Book for compliance rules.

Tie Breaking: Single fly-off with bonus points added to fly-off flight score. If tie remains, give multiple awards

***BONUS POINT CALCULATION**:

High Wing Monoplane = 0	Mid-Wing = 5	Biplane = 15
Parasol = 3	Low-Wing = 10	Triplane = 20
Shoulder Wing = 5	Float Plane = 10	Multi-Engine = 20

Event # _____

EVENT NAME _____

Form # 7

2010 FAC PSEUDO DIME SCALE SCORING WORKSHEET
NOT FOR USE WITH FAC DIME SCALE

#	NAME	MODEL	Flt#1	Flt#2	Flt#3	3 Flt Total A	A ÷ 3	Place
ENTER FLYOFF SCORES BELOW.								

Do compliance check of model to plans prior to entering first flight score. Review Pages 28 through 30 of Rule Book for Scale Considerations & other compliance rules.

Tie Breaking: Not more than two flyoffs. If tie remains, multiple awards will be given.

THERE ARE NO BONUS POINTS AWARDED FOR PSEUDO DIME SCALE

Event # _____

PSEUDO DIME SCALE

Form # 8

2010 FAC JET CATAPULT SCALE SCORING WORKSHEET

#	NAME	MODEL	Color & Markings 0 — 8	Details 0 — 8	Workmanship 0 — 4	Scale Points Total **A**	Flt # 1	Flt # 2	Flt # 3	Flt # 4	Flt # 5	Flt # 6	Best 3 Total **B**	Bonus Points **C**	Total **A+ B+ C**	Place

BONUS POINT CALCULATION:
5 POINTS FOR FLYING WING OR CANARD
1 POINT FOR EACH SCALE ENGINE, POD OR TANK IN PROFILE NOT CONTAINED IN FUSELAGE CONTOUR
ADD BONUS POINTS ONE TIME TO BEST 3 FLIGHT TOTAL

Tie Breaking: Single fly-off with bonus and scale points added to fly-off flight score. If tie remains, give multiple awards

Form # 9 **JET CAT SCALE** Event # _____

2010 FAC EMBRYO SCORING WORKSHEET

#	NAME	MODEL	Bonus Points * **A**	Flt#1	Flt#2	Flt#3	Total 3 Flts **B**	Score= **A+ B**	Place

Event# _____

FAC EMBRYO

***BONUS POINT CALCULATION FOR EMBRYO**:
3D Exhaust = 1 point;
3D Wheel Pants = 3 points;
Open Cockpit with windscreen and headrest = 5 points;
Cabin with 30º+ windscreen slant = 5 points

NO 20 second minimum, 120 = Max unless reduced by CD.

Add bonus points for Embryo **only to the total** of the three flights.
Tie Breaking: Single fly-off with bonus points added to fly-off flight score. If tie remains, give multiple awards

Form # 10

2010 FAC NO-CAL PROFILE SCALE SCORING WORKSHEET

#	NAME	MODEL	Flt#1	Flt#2	Flt#3	3 Flt Total	Place
ENTER FLYOFF SCORES BELOW.							

Do compliance check of model to plans prior to entering first flight score. Review Page 32 of Rule Book for Scale Considerations & other compliance rules.

Tie Breaking: A single flyoff. If tie remains, multiple awards will be given.

Event # _____

FAC NO-CAL PROFILE SCALE

Form # 11

2010 SCORING WORKSHEET FOR FAC NON-JUDGED TIMED EVENTS

#	CONTESTANT Name	MODEL NAME	1ST	2ND	3RD	4TH	5TH	6TH	7TH	8TH	9TH	PLACE

SEE CURRENT FAC RULE BOOK FOR MIN/MAX TIMES, FLY-OFF RULES, ROG RULES, ETC.

NOTE: For Old Time Gas Replica, CD may use 3 flight target times with lowest total deviation declared winner.

Form # 12 **EVENT NAME** _____ Event # _____